Experiment # 3

Answer 1:

```
module TestBench();
    reg A=0, B=0, S=0;
    wire Y;
    initial begin
        A=0;
        B=0;
        S=0;
        A = #5 1;
        #5 B = 1;
        #5 S = 1;
        #5 B = 0;
        #5 A = 0;
    end
    Multiplexer mult(A,B,S,Y);
endmodule

module Multiplexer(
    input A,
    input B,
    input S,
    output reg Y
    );
    always@(A or B or S)
    begin
        assign Y = (S==0)? A : B;
    end
endmodule
```

Module (Code)

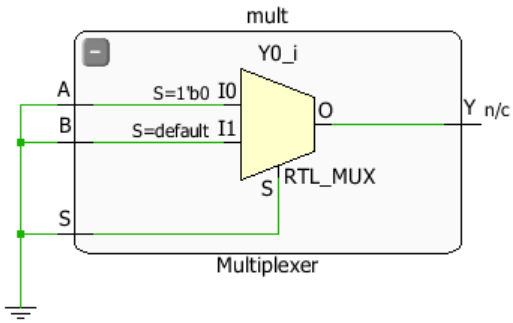

Schematic synthesis

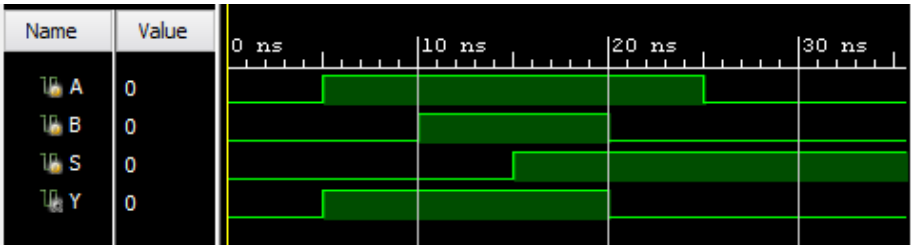

Output Waveform

Answer 2:

```
module TestBench();
    reg A=0, B=0, S=0;
    wire Y;
    always@(A or B or S)
    begin
        #5 A=1;
        #5 S=1;
        #5 A=0; B=1;
    end
    Multiplexer mult(A,B,S,Y);
endmodule

module Multiplexer(
    input A,
    input B,
    input S,
    output reg Y
    );
    always@(A or B or S)
    begin
        assign Y = (S==0)? A : B;
    end
endmodule
```

Module (Code)

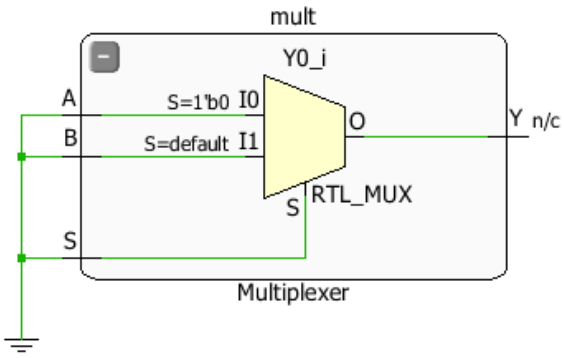

Schematic synthesis

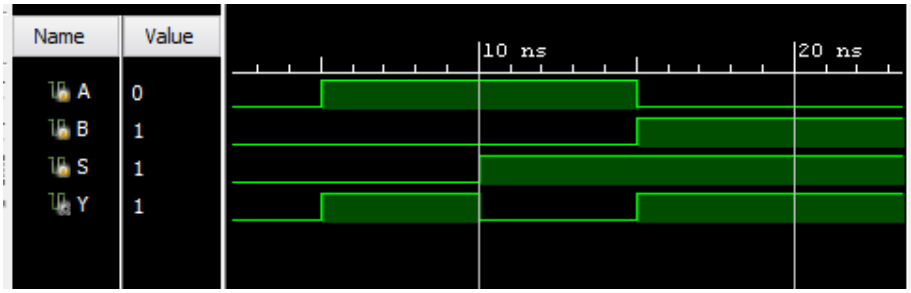

Output Waveform

Answer 3:

```
module TestBench();
    reg A=0;
    wire Y;
    initial begin
        A=0;
        A = #5 1;
        #5 A = 0;
    end
    mux_not mnot(A,Y);
endmodule

module Multiplexer(
    input A,B,S,
    output reg Y
    );
    always@(*)
    begin
        Y = (S==1)? B : A;
    end
endmodule

module mux_not(input A, output B);
    Multiplexer m(1,0,A,B);
endmodule
```

Module (Code)

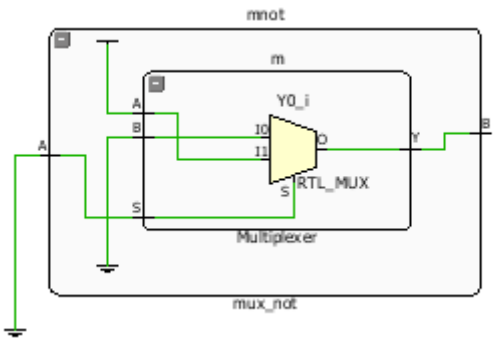

Schematic synthesis

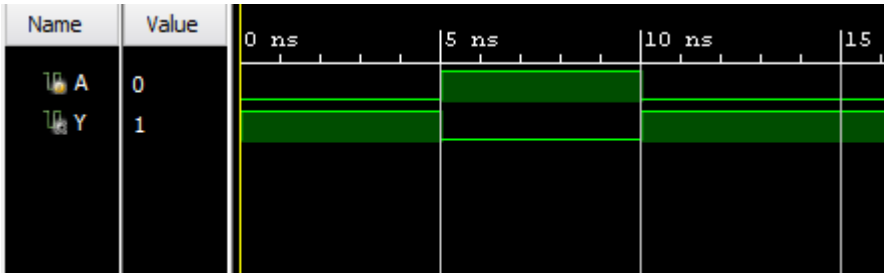

Output Waveform

Answer 4:

```
module TestBench();
    reg A=0, B=0, C=0;
    always@(A or B or C)
    begin
       A = #5 1;
       B = #5 0;
       C = #10 1;
       A = #15 0;
       B = #5 1;
       C = #5 0;
    end
endmodule
```

Module (Code)

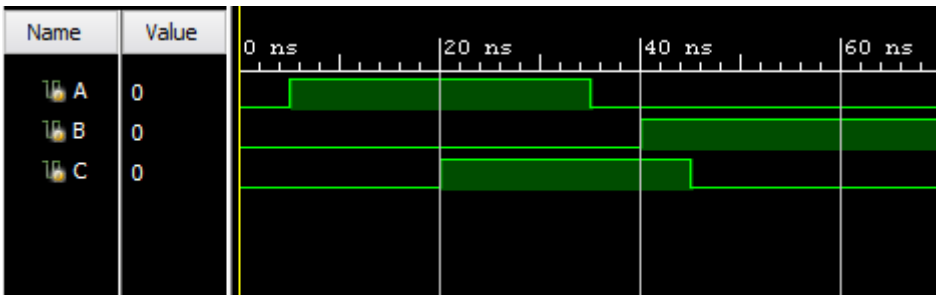

Output Waveform

Answer 5:

```
module te();
    reg A=0, B=0, C=0;
    always@(A or B or C)
    begin
       A <= #5 1;
       B <= #5 0;
       C <= #10 1;
       A <= #15 0;
       B <= #5 1;
       C <= #5 0;
    end
endmodule
```

Module (Code)

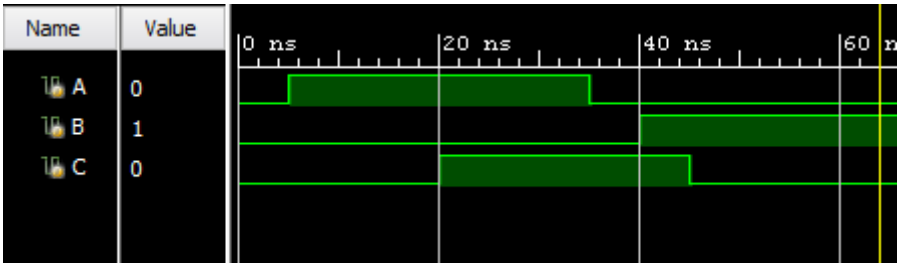

Output Waveform

Answer 6:

```
module te();
initial begin
    $display("Hello World");
end
endmodule
```

Module (Code)

```
# run 1000ns
Hello World
INFO: [USF-XSim-96] XSim completed. Design snapshot 'te_behav' loaded.
INFO: [USF-XSim-97] XSim simulation ran for 1000ns
launch_simulation: Time (s): cpu = 00:00:04 ; elapsed = 00:00:21 . Memory (MB): peak = 1163.375 ; gain = 0.000
```

Output

Answer 7:

```
module Pro7();
    reg a,b;
    wire c;
    initial begin
        a=0;
        b=0;
        a = #5 1;
        b = #5 1;
        a = #5 0;
    end
    Go g(a,b,c);
endmodule

module Go(
    input a,
    input b,
    output c
    );
    wire x,y;
    not(x,a);
    and(y,x,b);
    or(c,y,a);
endmodule
```

Module (Code)

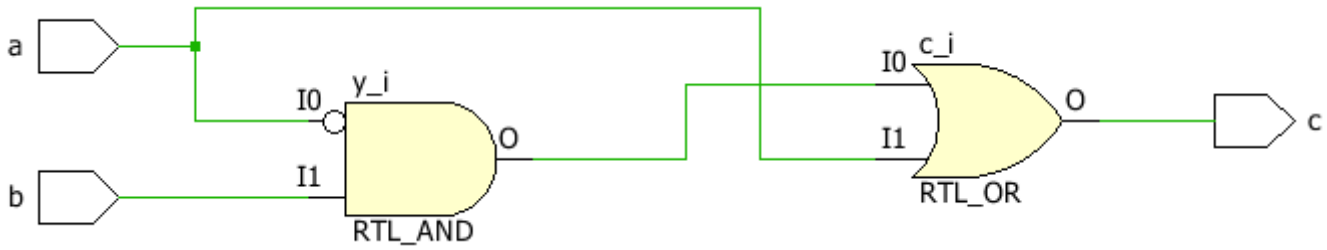

Schematic synthesis (Gate level)

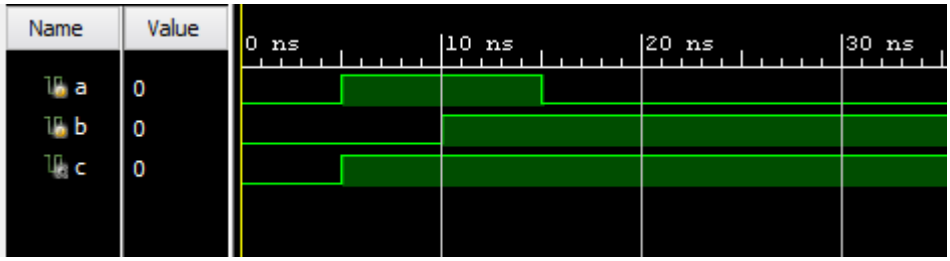

Output Waveform

Answer 8:

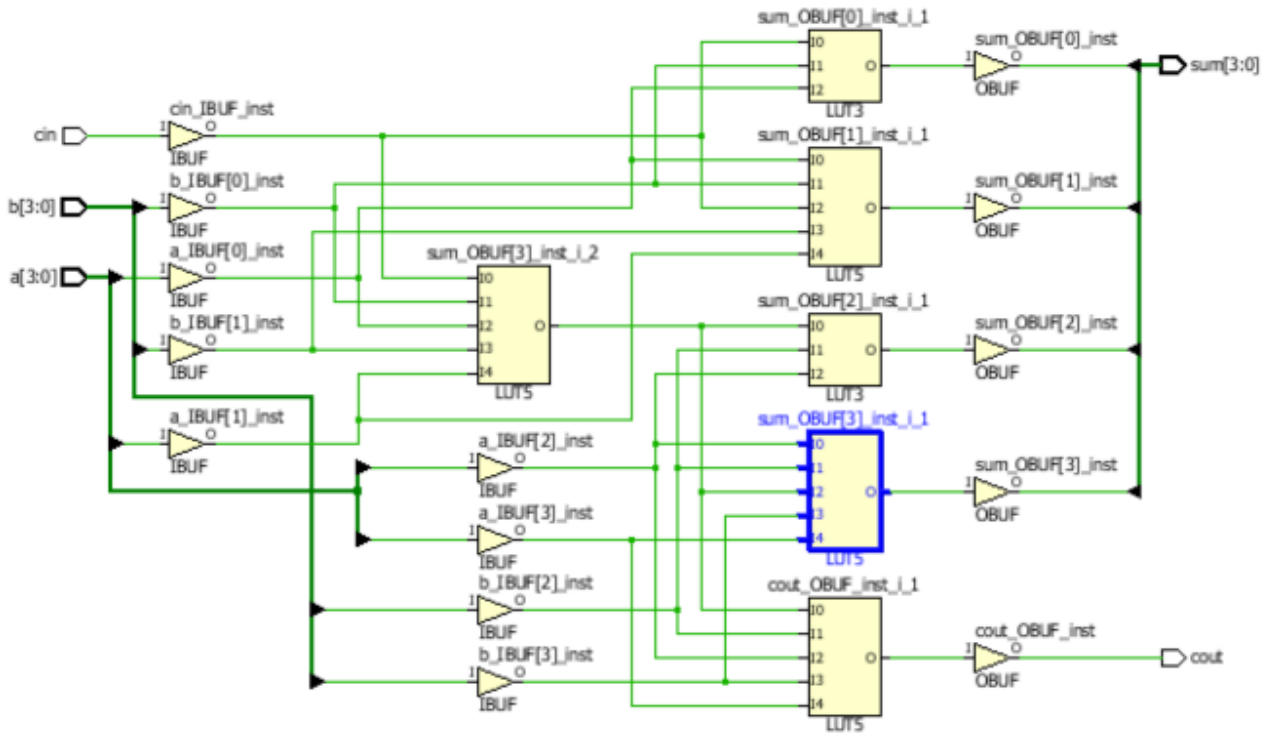

Schematic synthesis

```
module FullAdder(input a, input b, input c,
                 output s, output c2);
    wire w_sum, w_carry, w4;
    HalfAdder   hadder(a, b, w_sum, w_carry);
    HalfAdder   hadder2(c, w_sum, s, w4);
    or(c2, w4, w_carry);
endmodule

module FourBitAdder(
    input [3:0] a,
    input [3:0] b,
    input cin,
    output [3:0] sum,
    output cout
    );

    wire c1, c2, c3;
    FullAdder adder1(a[0], b[0], cin, sum[0], c1);
    FullAdder adder2(a[1], b[1], c1, sum[1], c2);
    FullAdder adder3(a[2], b[2], c2, sum[2], c3);
    FullAdder adder4(a[3], b[3], c3, sum[3], cout);
endmodule
```

```
module testbench();
    reg [3:0] a;
    reg [3:0] b;
    reg cin = 0;
    wire [3:0] c;
    wire cout; // Output

    initial begin
        a = 5;
        b = 4;
        #5 a = 2;
        #5 b = 14;
        #5 cin = 1;
        #5 b = 2;
        #5 a = 13;
        #5 b = 15;
        #5 cin = 0;
        #5 a = 8;
        #5 b = 0;
    end
    FourBitAdder adder(a, b, cin, c, cout);
endmodule

module HalfAdder(
    input a,
    input b,
    output s,
    output c
    );

    xor(s, a, b);
    and(c, a, b);
endmodule
```

Module (Code)

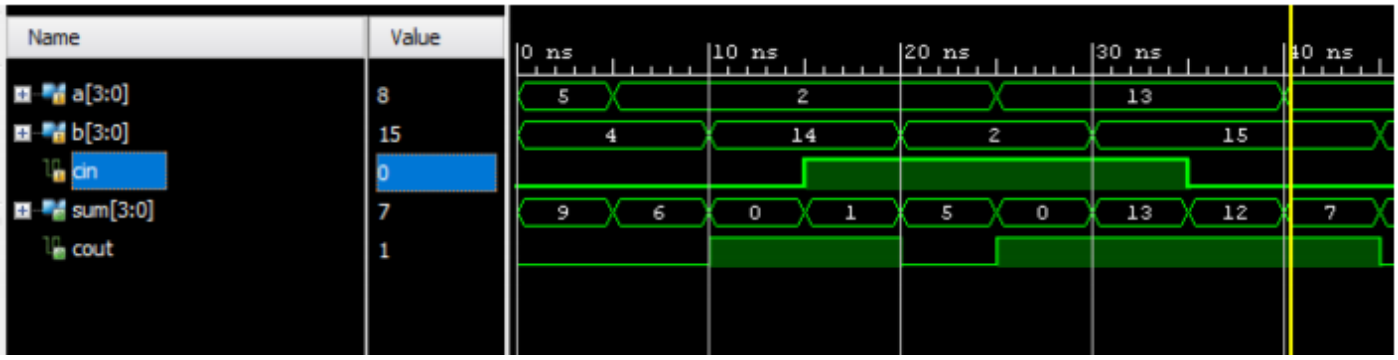

Output Waveform